EED 101 INTRODUCTION TO ELECTRICAL ENGINEERING

SPRING 2017 **INSTRUCTOR: DR G NAVEEN BABU**

PROBLEM SET 4 SOLUTIONS

REFERENCE TEXT BOOK: INTRODUCTORY CIRCUIT ANALYSIS, ROBERT BOYLESTAD, ***12TH EDITION***

Chapter 8: 49,50,61,62,69

Chapter 9: 3,6,7

8.

Node V_1:

$$2\text{ A} = \frac{V_1}{6\,\Omega} + \frac{V_1 - V_2}{10\,\Omega}$$

Supernode V_2, V_3:

$$0 = \frac{V_2 - V_1}{10\,\Omega} + \frac{V_2}{4\,\Omega} + \frac{V_3}{12\,\Omega}$$

Independent source:

$$V_2 - V_3 = 24\text{ V or } V_3 = V_2 - 24\text{ V}$$

$$\frac{V_1}{6\,\Omega} + \frac{V_1 - V_2}{10\,\Omega} = 2\text{ A}$$

$$\frac{V_2 - V_1}{10\,\Omega} + \frac{V_2}{4\,\Omega} + \frac{V_2 - 24\text{ V}}{12\,\Omega} = 0$$

$$0.267V_1 - 0.1V_2 = 2$$

$$+0.1V_1 - 0.433V_2 = -2$$

$$V_1 = \mathbf{10.08\text{ V}},\ V_2 = \mathbf{6.94\text{ V}}$$

$$V_3 = V_2 - 24\text{ V} = \mathbf{-17.06\text{ V}}$$

50

Supernode:

$$3\text{ A} + 4\text{ A} = 3\text{ A} + \frac{V_1}{20\,\Omega} + \frac{V_2}{40\,\Omega}$$

2 eq. 2 unk. $\begin{cases} 4\text{ A} = \dfrac{V_1}{20\,\Omega} + \dfrac{V_2}{40\,\Omega} \\ V_2 - V_1 = 16\text{ V} \end{cases}$

Subt. $V_2 = 16\text{ V} + V_1$

$$4\text{ A} = \frac{V_1}{20\,\Omega} + \frac{(16\text{ V} + V_1)}{40\,\Omega}$$

and $V_1 = \mathbf{48\ V}$

$V_2 = 16\text{ V} + V_1 = \mathbf{64\ V}$

61

Mesh analysis:

$$(1\text{ k}\Omega + 2\text{ k}\Omega + 2\text{ k}\Omega)I_1 - 2\text{ k}\Omega\, I_2 - 2\text{ k}\Omega\, I_3 = 10$$
$$(2\text{ k}\Omega + 2\text{ k}\Omega + 2\text{ k}\Omega)I_2 - 2\text{ k}\Omega\, I_1 - 2\text{ k}\Omega\, I_3 = 0$$
$$(2\text{ k}\Omega + 2\text{ k}\Omega + 2\text{ k}\Omega)I_3 - 2\text{ k}\Omega\, I_1 - 2\text{ k}\Omega\, I_2 = 0$$

$$I_1 = I_{10\text{V}} = \mathbf{3.33\ mA}$$

Nodal Analysis:

$$V_1\left[\frac{1}{1\text{ k}\Omega} + \frac{1}{2\text{ k}\Omega} + \frac{1}{2\text{ k}\Omega}\right] - \frac{1}{2\text{ k}\Omega}V_2 - \frac{1}{2\text{ k}\Omega}V_3 = 10\text{ mA}$$
$$V_2\left[\frac{1}{2\text{ k}\Omega} + \frac{1}{2\text{ k}\Omega} + \frac{1}{2\text{ k}\Omega}\right] - \frac{1}{2\text{ k}\Omega}V_1 - \frac{1}{2\text{ k}\Omega}V_3 = 0$$
$$V_3\left[\frac{1}{2\text{ k}\Omega} + \frac{1}{2\text{ k}\Omega} + \frac{1}{2\text{ k}\Omega}\right] - \frac{1}{2\text{ k}\Omega}V_2 - \frac{1}{2\text{ k}\Omega}V_1 = 0$$

$$V_1 = 6.67\text{ V} = E - IR_s = 10\text{ V} - I(1\text{ k}\Omega)$$
$$I = \frac{10 - 6.67\text{ V}}{1\text{ k}\Omega} = \mathbf{3.33\ mA}$$

62

Mesh Analysis:

$$(10 + 10 + 20)I_1 - 10I_2 - 20I_3 = 20$$
$$(10 + 20 + 20)I_2 - 10I_1 - 20I_3 = 0$$
$$(20 + 20 + 10)I_3 - 20I_1 - 20I_2 = 0$$

$$I_1 = I_{20\text{V}} = 0.83\text{ A}$$

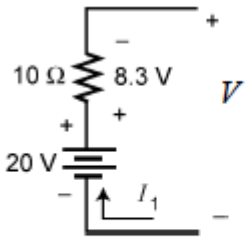

$$V = 20\text{ V} - 8.3\text{ V}$$
$$= 11.7\text{ V}$$

$$I_s = \frac{V}{R_s} = \frac{11.70\text{ V}}{10\,\Omega} = \mathbf{1.17A}$$

Nodal Analysis:

$$V_1\left[\frac{1}{10}+\frac{1}{10}+\frac{1}{20}\right]-\left[\frac{1}{20}\right]V_2-\left[\frac{1}{10}\right]V_3 = 2$$
$$V_2\left[\frac{1}{20}+\frac{1}{20}+\frac{1}{10}\right]-\left[\frac{1}{20}\right]V_1-\left[\frac{1}{20}\right]V_3 = 0$$
$$V_3\left[\frac{1}{10}+\frac{1}{20}+\frac{1}{20}\right]-\left[\frac{1}{10}\right]V_1-\left[\frac{1}{20}\right]V_2 = 0$$

$$I_{R_s} = \frac{V_1}{R_s} = \mathbf{1.17\ A}$$

69

Using two $\Delta - Y$ conversions:

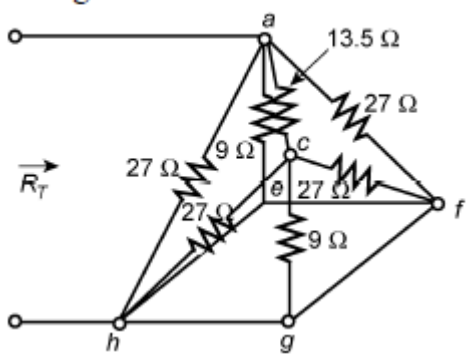

c – g: 27 Ω|| 9 Ω || 27 Ω = 5.4 Ω

a – h: 27 Ω || 9 Ω || 27 Ω = 5.4 Ω

R_T = 5.4 Ω || (13.5 Ω + 5.4 Ω)
= 5.4 Ω || 18.9Ω
= **4.2 Ω**

Chapter 9

3. *E*:

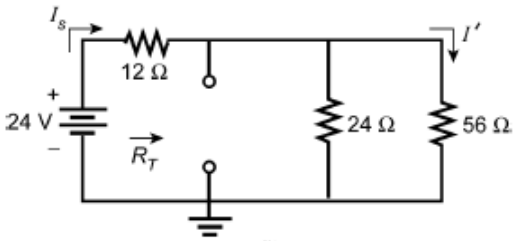

$$R_T = 12\ \Omega + 24\ \Omega \,||\, 56\ \Omega = 28.8\ \Omega$$

$$I_s = \frac{E}{R_T} = \frac{24\ \text{V}}{28.8\ \Omega} = 0.833\ \text{A}$$

$$I'_{56\Omega} = \frac{24\ \Omega(0.833\ \text{A})}{24\ \Omega + 56\ \Omega} = 0.25\ \text{A}$$

I:

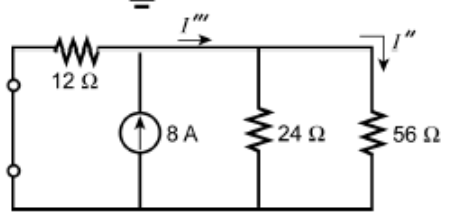

$$24\ \Omega \,||\, 56\ \Omega = 16.8\ \Omega$$

$$I''' = \frac{12\ \Omega(8\ \text{A})}{12\ \Omega + 16.8\ \Omega} = 3.33\ \text{A}$$

$$I''_{56\Omega} = \frac{24\ \Omega(3.33\ \text{A})}{24\ \Omega + 56\ \Omega} = 1\ \text{A}$$

$$I_{56\Omega} = I' + I'' = 0.25\ \text{A} + 1\ \text{A} = \mathbf{1.25\ A}\downarrow$$

6. *I*:

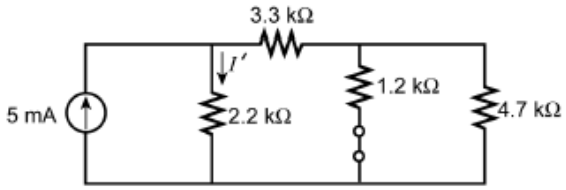

$$1.2\ \text{k}\Omega \,||\, 4.7\ \text{k}\Omega = 0.956\ \text{k}\Omega$$

$$3.3\ \text{k}\Omega + 0.956\ \text{k}\Omega = 4.256\ \text{k}\Omega$$

$$I' = \frac{4.256\ \text{k}\Omega(5\ \text{mA})}{2.2\ \text{k}\Omega + 4.256\ \text{k}\Omega} = 3.3\,\text{mA}$$

E:

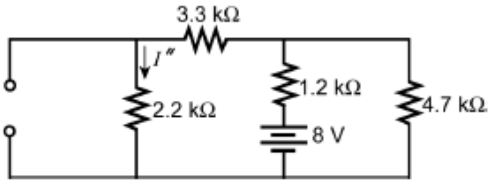

$$2.2\ \text{k}\Omega + 3.3\ \text{k}\Omega = 5.5\ \text{k}\,\Omega$$

$$5.5\ \text{k}\Omega \,||\, 4.7\ \text{k}\Omega = 2.53\ \text{k}\Omega$$

$$R_T = 2.54\ \text{k}\Omega + 1.2\ \text{k}\Omega = 3.73\ \text{k}\Omega$$

$$I_s = \frac{8\ \text{V}}{3.73\ \text{k}\Omega} = 2.14\ \text{mA}$$

$$I'' = \frac{4.7\ \text{k}\Omega(21.4\ \text{mA})}{4.7\ \text{k}\Omega + 5.5\ \text{k}\Omega} = 0.986\ \text{mA}$$

$$I = I' + I'' = 3.3\ \text{mA} + 0.986\ \text{mA} = \mathbf{4.286\ mA}$$

7. E_1:

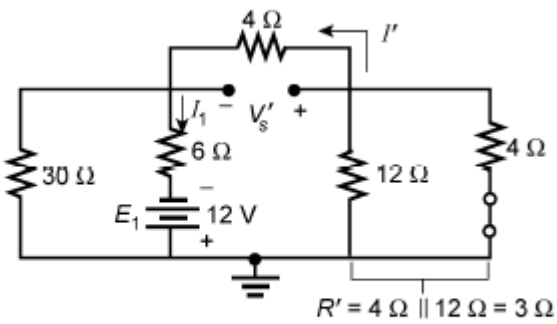

$$I_1 = \frac{E_1}{R_T} = \frac{12\ \text{V}}{6\ \Omega + 5.88\ \Omega} = 1.03\ \text{A}$$

$$I' = \frac{30\ \Omega(I_1)}{30\ \Omega + 7\ \Omega} = \frac{30\ \Omega(1.03\ \text{A})}{37\ \Omega}$$
$$= 835.14\ \text{mA}$$
$$V_s' = I'(4\ \Omega) = (835.14\ \text{mA})(4\ \Omega)$$
$$= 3.34\ \text{V}$$

I:

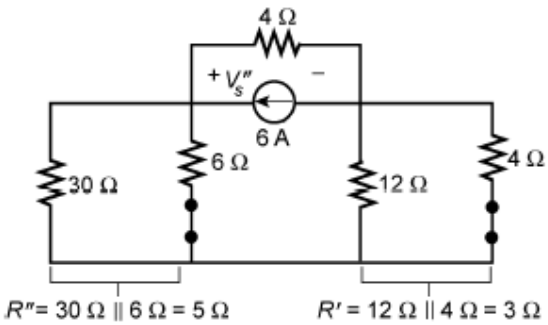

$$I' = \frac{8\ \Omega(6\ \text{A})}{8\ \Omega + 4\ \Omega} = 4\ \text{A}$$
$$V_s'' = I'(4\ \Omega) = 4\ \text{A}(4\ \Omega) = 16\ \text{V}$$

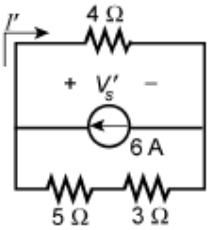

E_2:

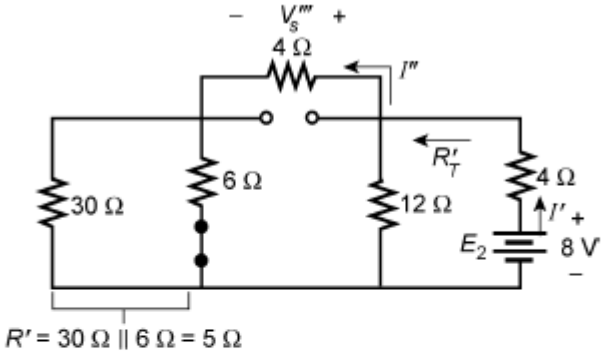

$$R'_T = 12\ \Omega \parallel (4\ \Omega + 5\ \Omega) = 12\ \Omega \parallel 9\ \Omega = 5.14\ \Omega$$
$$I' = \frac{E_2}{R_T} = \frac{8\ \text{V}}{4\ \Omega + 5.14\ \Omega} = 0.875\ \text{A}$$
$$I'' = \frac{12\ \Omega(I')}{12\ \Omega + 9\ \Omega} = \frac{12\ \Omega(0.875\ \text{A})}{21\ \Omega} = 0.5\ \text{A}$$
$$V_s''' = I''(4\ \Omega) = 0.5\ \text{A}(4\ \Omega) = 2\ \text{V}$$
$$V_s = V_s'' - V_s' - V_s''' = 16\ \text{V} - 3.34\ \text{V} - 2\ \text{V} = \mathbf{10.66\ V}$$